SCHEME FOR 2004 - 2010 MODEL

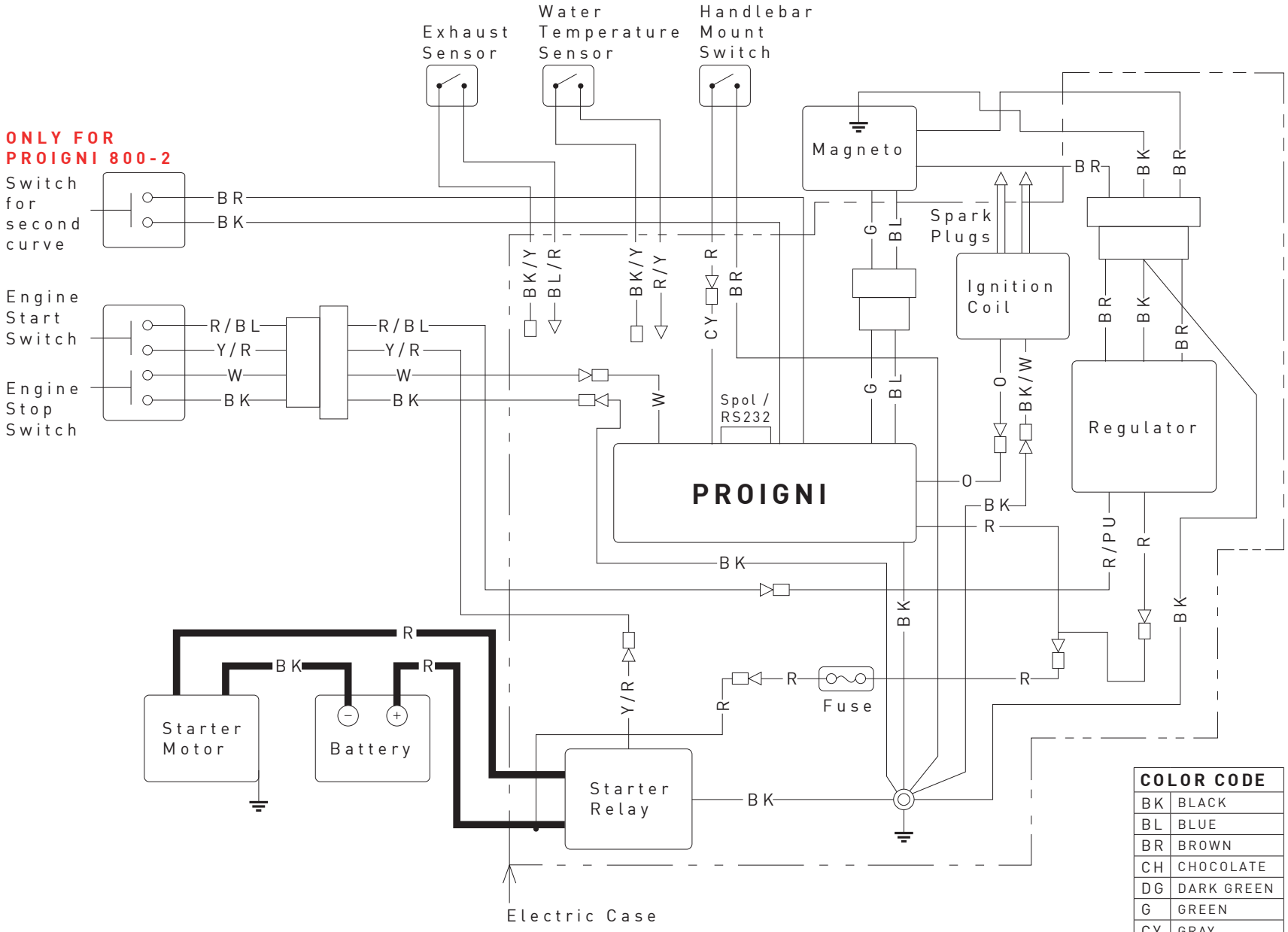

COLOR CODE	
BK	BLACK
BL	BLUE
BR	BROWN
CH	CHOCOLATE
DG	DARK GREEN
G	GREEN
CY	GRAY
LB	LIGHT BLUE
LG	LIGHT GREEN
O	ORANGE
P	PINK
PU	PURPLE
R	RED
W	WHITE
Y	YELLOW

LEFT HANDLEBAR SWITCH CONNECTIONS

ENGINE START SWITCH			ENGINE STOP SWITCH		
COLOR	R/BL	Y/R	COLOR	W	BK
PUSH			PUSH		
OFF			OFF		

WIRING DIAGRAM

PROIGNI

for Kawasaki SXR 800 (2004–2010)